# P905

+135° -30° | PA6 +G.F. | RoHS COMPLIANT

## 16 ОПОРА МАЛЕНЬКАЯ С ШАРНИРНЫМ СТЕРЖНЕМ ТИПА А ИЗ СТАЛИ С ШАРОВОЙ ГОЛОВКОЙ 15

Опоры из пластика - с шарнирным стержнем

**Материалы:**

Усиленный полиамид.

Устойчивость к маслам и жирам.

**Поверхность:**

Сатинирован.

**Цвет:**

Черный (RAL 9011).

**Вставки:**

Версия P905:

Шарнирный резьбовой стержень (шаровая головка 15) с шестигранным основанием из оцинкованной стали (допуск резьбы 6g).

Версия P905CIN:

Шарнирный резьбовой стержень (шаровая головка 15) с шестигранным основанием из нержавеющей стали (AISI 303) (допуск резьбы 6g).

**Специальные запросы:**

По запросу, при наличии объемов, вставки могут изготавливаться длиной под заказ.

По запросу, при наличии объемов, опора может изготавливаться оранжевого цвета (RAL 2004).

Copyright ©

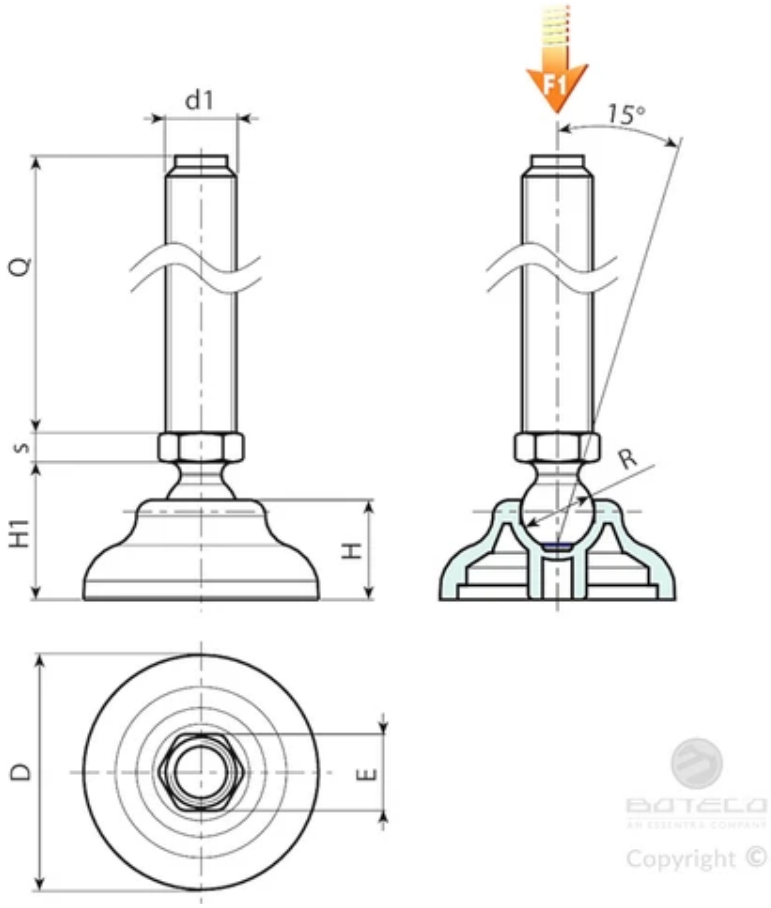


**Версия P905: Опора со стержнем типа A (с шестигранником) и шаровой головкой 15**

| Код | Арт. | D | H | H1 | E | s | R | d1 6g | Q | Вес (г) | F1 (kN) |
|---|---|---|---|---|---|---|---|---|---|---|---|
| P90540.0001 | P90540.TM12X5001 | 40 | 17 | 23 | 16 | 6.5 | 15 | M12 | 50 | 84 | 13 |
| P90540.0003 | P90540.TM12X7001 | 40 | 17 | 23 | 16 | 6.5 | 15 | M12 | 70 | 97 | 13 |
| P90540.0005 | P90540.TM12X9001 | 40 | 17 | 23 | 16 | 6.5 | 15 | M12 | 90 | 110 | 13 |
| P90540.0007 | P90540.TM12X11001 | 40 | 17 | 23 | 16 | 6.5 | 15 | M12 | 110 | 123 | 13 |
| P90540.0009 | P90540.TM14X5001 | 40 | 17 | 23 | 16 | 6.5 | 15 | M14 | 50 | 112 | 13 |
| P90540.0011 | P90540.TM14X7001 | 40 | 17 | 23 | 16 | 6.5 | 15 | M14 | 70 | 136 | 13 |
| P90540.0013 | P90540.TM14X9001 | 40 | 17 | 23 | 16 | 6.5 | 15 | M14 | 90 | 171 | 13 |
| P90540.0015 | P90540.TM14X11001 | 40 | 17 | 23 | 16 | 6.5 | 15 | M14 | 110 | 184 | 13 |
| P90540.0017 | P90540.TM14X15001 | 40 | 17 | 23 | 16 | 6.5 | 15 | M14 | 150 | 210 | 13 |
| P90540.0019 | P90540.TM16X5001 | 40 | 17 | 23 | 16 | 6.5 | 15 | M16 | 50 | 131 | 13 |
| P90540.0021 | P90540.TM16X7001 | 40 | 17 | 23 | 16 | 6.5 | 15 | M16 | 70 | 163 | 13 |
| P90540.0023 | P90540.TM16X9001 | 40 | 17 | 23 | 16 | 6.5 | 15 | M16 | 90 | 195 | 13 |
| P90540.0026 | P90540.TM16X11001 | 40 | 17 | 23 | 16 | 6.5 | 15 | M16 | 110 | 227 | 13 |
| P90540.0028 | P90540.TM16X13001 | 40 | 17 | 23 | 16 | 6.5 | 15 | M16 | 130 | 259 | 13 |
| P90540.0030 | P90540.TM16X15001 | 40 | 17 | 23 | 16 | 6.5 | 15 | M16 | 150 | 295 | 13 |
| P90540.0032 | P90540.TM16X17001 | 40 | 17 | 23 | 16 | 6.5 | 15 | M16 | 170 | 323 | 13 |
| P90540.0034 | P90540.TM16X19001 | 40 | 17 | 23 | 16 | 6.5 | 15 | M16 | 190 | 365 | 13 |
| P90550.0001 | P90550.TM12X5001 | 50 | 18 | 24 | 16 | 6.5 | 15 | M12 | 50 | 88 | 13 |
| P90550.0003 | P90550.TM12X7001 | 50 | 18 | 24 | 16 | 6.5 | 15 | M12 | 70 | 101 | 13 |
| P90550.0005 | P90550.TM12X9001 | 50 | 18 | 24 | 16 | 6.5 | 15 | M12 | 90 | 114 | 13 |
| P90550.0007 | P90550.TM12X11001 | 50 | 18 | 24 | 16 | 6.5 | 15 | M12 | 110 | 127 | 13 |

| Код | Арт. | D | H | H1 | E | s | R | d1 6g | Q | Вес (г) | F1 (kN) |
|---|---|---|---|---|---|---|---|---|---|---|---|
| P90550.0009 | P90550.TM14X5001 | 50 | 18 | 24 | 16 | 6.5 | 15 | M14 | 50 | 97 | 13 |
| P90550.0011 | P90550.TM14X7001 | 50 | 18 | 24 | 16 | 6.5 | 15 | M14 | 70 | 116 | 13 |
| P90550.0013 | P90550.TM14X9001 | 50 | 18 | 24 | 16 | 6.5 | 15 | M14 | 90 | 134 | 13 |
| P90550.0015 | P90550.TM14X11001 | 50 | 18 | 24 | 16 | 6.5 | 15 | M14 | 110 | 152 | 13 |
| P90550.0017 | P90550.TM14X15001 | 50 | 18 | 24 | 16 | 6.5 | 15 | M14 | 150 | 189 | 13 |
| P90550.0019 | P90550.TM16X5001 | 50 | 18 | 24 | 16 | 6.5 | 15 | M16 | 50 | 110 | 13 |
| P90550.0021 | P90550.TM16X7001 | 50 | 18 | 24 | 16 | 6.5 | 15 | M16 | 70 | 137 | 13 |
| P90550.0023 | P90550.TM16X9001 | 50 | 18 | 24 | 16 | 6.5 | 15 | M16 | 90 | 164 | 13 |
| P90550.0025 | P90550.TM16X11001 | 50 | 18 | 24 | 16 | 6.5 | 15 | M16 | 110 | 191 | 13 |
| P90550.0027 | P90550.TM16X13001 | 50 | 18 | 24 | 16 | 6.5 | 15 | M16 | 130 | 218 | 13 |
| P90550.0029 | P90550.TM16X15001 | 50 | 18 | 24 | 16 | 6.5 | 15 | M16 | 150 | 245 | 13 |
| P90550.0031 | P90550.TM16X17001 | 50 | 18 | 24 | 16 | 6.5 | 15 | M16 | 170 | 272 | 13 |
| P90550.0033 | P90550.TM16X19001 | 50 | 18 | 24 | 16 | 6.5 | 15 | M16 | 190 | 299 | 13 |
| P90560.0007 | P90560.TM12X5001 | 60 | 20 | 26 | 16 | 6.5 | 15 | M12 | 50 | 96 | 13 |
| P90560.0009 | P90560.TM12X7001 | 60 | 20 | 26 | 16 | 6.5 | 15 | M12 | 70 | 109 | 13 |
| P90560.0011 | P90560.TM12X9001 | 60 | 20 | 26 | 16 | 6.5 | 15 | M12 | 90 | 122 | 13 |
| P90560.0001 | P90560.TM12X11001 | 60 | 20 | 26 | 16 | 6.5 | 15 | M12 | 110 | 135 | 13 |
| P90560.0018 | P90560.TM14X5001 | 60 | 20 | 26 | 16 | 6.5 | 15 | M14 | 50 | 105 | 13 |
| P90560.0020 | P90560.TM14X7001 | 60 | 20 | 26 | 16 | 6.5 | 15 | M14 | 70 | 124 | 13 |
| P90560.0022 | P90560.TM14X9001 | 60 | 20 | 26 | 16 | 6.5 | 15 | M14 | 90 | 142 | 13 |
| P90560.0013 | P90560.TM14X11001 | 60 | 20 | 26 | 16 | 6.5 | 15 | M14 | 110 | 160 | 13 |
| P90560.0016 | P90560.TM14X15001 | 60 | 20 | 26 | 16 | 6.5 | 15 | M14 | 150 | 197 | 13 |
| P90560.0035 | P90560.TM16X5001 | 60 | 20 | 26 | 16 | 6.5 | 15 | M16 | 50 | 118 | 13 |
| P90560.0037 | P90560.TM16X7001 | 60 | 20 | 26 | 16 | 6.5 | 15 | M16 | 70 | 145 | 13 |
| P90560.0039 | P90560.TM16X9001 | 60 | 20 | 26 | 16 | 6.5 | 15 | M16 | 90 | 172 | 13 |
| P90560.0025 | P90560.TM16X11001 | 60 | 20 | 26 | 16 | 6.5 | 15 | M16 | 110 | 199 | 13 |
| P90560.0027 | P90560.TM16X13001 | 60 | 20 | 26 | 16 | 6.5 | 15 | M16 | 130 | 226 | 13 |
| P90560.0029 | P90560.TM16X15001 | 60 | 20 | 26 | 16 | 6.5 | 15 | M16 | 150 | 253 | 13 |
| P90560.0031 | P90560.TM16X17001 | 60 | 20 | 26 | 16 | 6.5 | 15 | M16 | 170 | 280 | 13 |
| P90560.0033 | P90560.TM16X19001 | 60 | 20 | 26 | 16 | 6.5 | 15 | M16 | 190 | 307 | 13 |

Внимание: Указанная предельная нагрузка F1 меньше разрушающей нагрузки на 30%, при статическом нагружении.
По запросу при минимальном заказе 100 штук длина штыря может изготавливаться под заказ.

**Версия P905CIN: Опора со стержнем типа A (с шестигранником) и шаровой головкой 15 - из нержавеющей стали**

| Код | Арт. | D | H | H1 | E | s | R | d1 6g | Q | Вес (г) | F1 (kN) |
|---|---|---|---|---|---|---|---|---|---|---|---|
| P90540.0004 | P90540.TM12X7001CIN | 40 | 17 | 23 | 16 | 6.5 | 15 | M12 | 70 | 97 | 13 |
| P90540.0006 | P90540.TM12X9001CIN | 40 | 17 | 23 | 16 | 6.5 | 15 | M12 | 90 | 110 | 13 |
| P90540.0008 | P90540.TM12X11001CIN | 40 | 17 | 23 | 16 | 6.5 | 15 | M12 | 110 | 121 | 13 |
| P90540.0012 | P90540.TM14X7001CIN | 40 | 17 | 23 | 16 | 6.5 | 15 | M14 | 70 | 112 | 13 |
| P90540.0066 | P90540.TM14X13001CIN | 40 | 17 | 23 | 16 | 6.5 | 15 | M14 | 130 | 165 | 13 |

| Код | Арт. | D | H | H1 | E | s | R | d1 6g | Q | Вес (г) | F1 (kN) |
|---|---|---|---|---|---|---|---|---|---|---|---|
| P90540.0020 | P90540.TM16X5001CIN | 40 | 17 | 23 | 16 | 6.5 | 15 | M16 | 50 | 106 | 13 |
| P90540.0022 | P90540.TM16X7001CIN | 40 | 17 | 23 | 16 | 6.5 | 15 | M16 | 70 | 133 | 13 |
| P90540.0024 | P90540.TM16X9001CIN | 40 | 17 | 23 | 16 | 6.5 | 15 | M16 | 90 | 160 | 13 |
| P90540.0027 | P90540.TM16X11001CIN | 40 | 17 | 23 | 16 | 6.5 | 15 | M16 | 110 | 187 | 13 |
| P90540.0029 | P90540.TM16X13001CIN | 40 | 17 | 23 | 16 | 6.5 | 15 | M16 | 130 | 211 | 13 |
| P90540.0031 | P90540.TM16X15001CIN | 40 | 17 | 23 | 16 | 6.5 | 15 | M16 | 150 | 240 | 13 |
| P90540.0033 | P90540.TM16X17001CIN | 40 | 17 | 23 | 16 | 6.5 | 15 | M16 | 170 | 268 | 13 |
| P90540.0035 | P90540.TM16X19001CIN | 40 | 17 | 23 | 16 | 6.5 | 15 | M16 | 190 | 295 | 13 |
| P90550.0004 | P90550.TM12X7001CIN | 50 | 18 | 24 | 16 | 6.5 | 15 | M12 | 70 | 101 | 13 |
| P90550.0006 | P90550.TM12X9001CIN | 50 | 18 | 24 | 16 | 6.5 | 15 | M12 | 90 | 114 | 13 |
| P90550.0008 | P90550.TM12X11001CIN | 50 | 18 | 24 | 16 | 6.5 | 15 | M12 | 110 | 125 | 13 |
| P90550.0012 | P90550.TM14X7001CIN | 50 | 18 | 24 | 16 | 6.5 | 15 | M14 | 70 | 116 | 13 |
| P90550.0065 | P90550.TM14X13001CIN | 50 | 18 | 24 | 16 | 6.5 | 15 | M14 | 130 | 170 | 13 |
| P90550.0020 | P90550.TM16X5001CIN | 50 | 18 | 24 | 16 | 6.5 | 15 | M16 | 50 | 110 | 13 |
| P90550.0022 | P90550.TM16X7001CIN | 50 | 18 | 24 | 16 | 6.5 | 15 | M16 | 70 | 137 | 13 |
| P90550.0024 | P90550.TM16X9001CIN | 50 | 18 | 24 | 16 | 6.5 | 15 | M16 | 90 | 164 | 13 |
| P90550.0026 | P90550.TM16X11001CIN | 50 | 18 | 24 | 16 | 6.5 | 15 | M16 | 110 | 191 | 13 |
| P90550.0028 | P90550.TM16X13001CIN | 50 | 18 | 24 | 16 | 6.5 | 15 | M16 | 130 | 215 | 13 |
| P90550.0030 | P90550.TM16X15001CIN | 50 | 18 | 24 | 16 | 6.5 | 15 | M16 | 150 | 245 | 13 |
| P90550.0032 | P90550.TM16X17001CIN | 50 | 18 | 24 | 16 | 6.5 | 15 | M16 | 170 | 272 | 13 |
| P90550.0034 | P90550.TM16X19001CIN | 50 | 18 | 24 | 16 | 6.5 | 15 | M16 | 190 | 299 | 13 |
| P90560.0010 | P90560.TM12X7001CIN | 60 | 20 | 26 | 16 | 6.5 | 15 | M12 | 70 | 109 | 13 |
| P90560.0012 | P90560.TM12X9001CIN | 60 | 20 | 26 | 16 | 6.5 | 15 | M12 | 90 | 122 | 13 |
| P90560.0002 | P90560.TM12X11001CIN | 60 | 20 | 26 | 16 | 6.5 | 15 | M12 | 110 | 133 | 13 |
| P90560.0021 | P90560.TM14X7001CIN | 60 | 20 | 26 | 16 | 6.5 | 15 | M14 | 70 | 124 | 13 |
| P90560.0015 | P90560.TM14X13001CIN | 60 | 20 | 26 | 16 | 6.5 | 15 | M14 | 130 | 178 | 13 |
| P90560.0036 | P90560.TM16X5001CIN | 60 | 20 | 26 | 16 | 6.5 | 15 | M16 | 50 | 118 | 13 |
| P90560.0038 | P90560.TM16X7001CIN | 60 | 20 | 26 | 16 | 6.5 | 15 | M16 | 70 | 145 | 13 |
| P90560.0040 | P90560.TM16X9001CIN | 60 | 20 | 26 | 16 | 6.5 | 15 | M16 | 90 | 172 | 13 |
| P90560.0026 | P90560.TM16X11001CIN | 60 | 20 | 26 | 16 | 6.5 | 15 | M16 | 110 | 199 | 13 |
| P90560.0028 | P90560.TM16X13001CIN | 60 | 20 | 26 | 16 | 6.5 | 15 | M16 | 130 | 226 | 13 |
| P90560.0030 | P90560.TM16X15001CIN | 60 | 20 | 26 | 16 | 6.5 | 15 | M16 | 150 | 253 | 13 |
| P90560.0032 | P90560.TM16X17001CIN | 60 | 20 | 26 | 16 | 6.5 | 15 | M16 | 170 | 280 | 13 |
| P90560.0034 | P90560.TM16X19001CIN | 60 | 20 | 26 | 16 | 6.5 | 15 | M16 | 190 | 307 | 13 |

Внимание: Указанная предельная нагрузка F1 меньше разрушающей нагрузки на 30%, при статическом нагружении.
По запросу при минимальном заказе 100 штук длина штыря может изготавливаться под заказ.